LABORSTAT L/LF

- Without housing
- Short response time
- Electrical connection on terminal screw

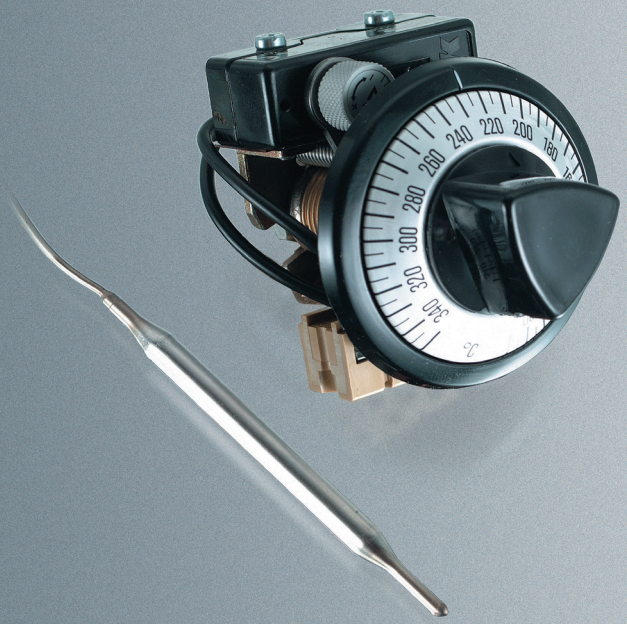

Trafag sensors & controls
Switzerland

Industriestrasse 11
8608 Bubikon

+41 44 922 32 32
www.trafag.com

trafag
sensors controls

Laborstat L/LF 736/754

Swiss based Trafag is a leading international supplier of high quality sensors and monitoring instruments for the measurement of pressure and temperature.

Applications

- Machine tools

Features

- Without housing
- Short response time
- Electrical connection on terminal screw

Technical Data			
Designation of application	Remote sensing thermostat, skeleton type	Switching differential	Adjustable / not adjustable
Measuring range	-30°C ... +40°C to +70°C ... +350°C	Repeatability	± 0.5 % FS typ.
Output signal	Floating change-over contact	Approval / conformity	EN60730-1/ EN60730-2-9: Typ 2.B.H

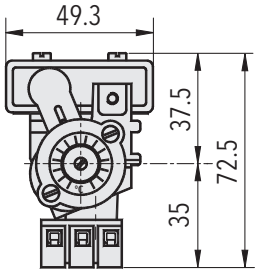

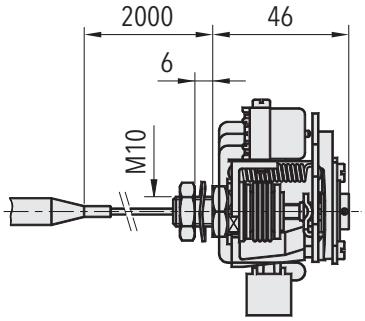

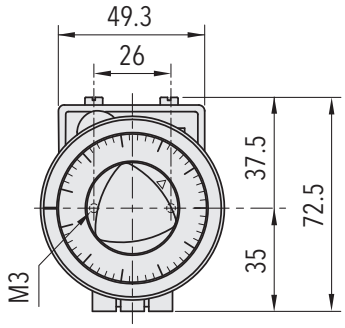

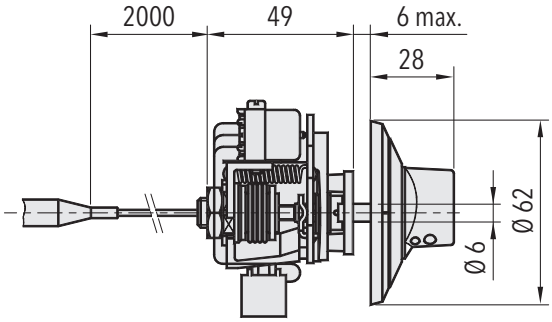

Data sheet www.trafag.com/H72122

trafag sensors controls

Subject to change H70967q 06/2021